ConLIFT
CONCRETE LIFTING SYSTEMS

parchem

Civil Design Manual

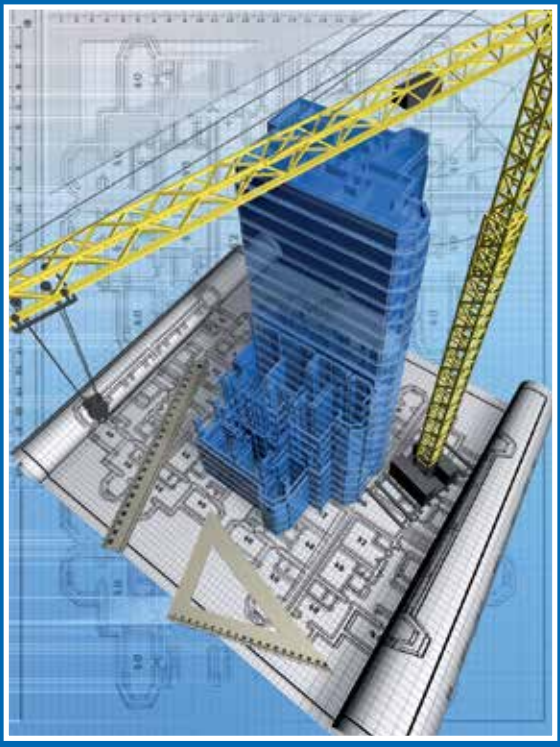

INTRODUCTION

This publication is a design manual to be used in conjunction with concrete engineering principles.
The design data included in this Technical Data Sheet relates to a variety of applications for Conlift 1.3T, 2.5T, 5T, 10T, 20T and 32T Foot and Eye Anchors. This information is provided for the assistance of appropriately qualified professionals in the preparation of lifting design specifications for concrete panels and concrete precast elements.
The appropriate personal protective equipment (safety eyewear, gloves, hardhats, hi-visibility vests and safety footwear) is to be worn during all stages of the production, transportation and installation of concrete elements.

IMPORTANT NOTE

This booklet was issued in May 2012 and supersedes all previous booklets with respect to these products. Due to ongoing research and development, changes may occur to specifications and features without notice.
It is recommended that you consult with Parchem Construction Supplies Pty Ltd or download the most current version of the handbook from www.parchem.com.au
The information in this manual should be read in conjunction with the other Conlift Design Manuals.

DISCLAIMER

These instructions are intended only for use by suitably qualified professional building, construction and erection specialists.
Parchem Construction Supplies Pty Ltd expressly excludes all or liability for an injury, damage, cost, expense or claim whatsoever suffered by any person resulting either directly or indirectly a from failure to install the Conlift Precast and Tilt Up products in accordance with these installation instructions.

CONTENTS

- INSTALATION OF CONLIFT FOOT AND EYE ANCHORS
- CONLIFT LIFTING CLUTCHES
- CONLIFT FOOT ANCHOR DIMENSIONS
- CONLIFT EYE ANCHOR DIMENSIONS
- CONLIFT RECESS FORMERS
- CONLIFT ANCHOR WORKING LOAD LIMITS (WLL)
- DESIGN CONSIDERATIONS FOR CONCRETE LIFTING SYSTEMS
- ENGINEERING NOTES FOR DESIGNING CONCRETE LIFTING ANCHORS WITH AS3850

CONLIFT FOOT AND EYE ANCHORS

Conlift foot and eye anchors are supplied in a range that will suit common industry working load limits (WWL). (1.3t, 2.5t, 10t, 20t and 32t)

The Conlift foot and eye anchors are tested in accordance with AS3850-2003 and exceed the requirements of the standards.

The designed safety factor of each anchor is 3 x the working load limit (WLL).

Each Conlift foot and eye anchor is clearly marked with the Conlift brand identification for traceablity and is marked with the working load limit (WLL) to ensure the correct anchor is used for the applicable load.

All Conlift foot and eye anchors are galvanised (hot dipped) to ensure they are resistant to atmospheric corrosion.

INSTALLATION OF CONLIFT FOOT AND EYE ANCHORS

- The correct anchors and accessories are specified after factoring in the weights, panel or element shape and size and the lifting and transport techniques.
- The matching recess former that suits the manufacturing procedure, anchor and lifting clutch is selected.
- Coat the formwork and recess formers with release agent.
- Place the Conlift Foot/Eye Anchor into the recess former.
- Fasten the recess former to the formwork as recommended.
- Tie the Anchor, Shear Bar (if used), and Tension Bar (for eye anchor), to any reinforcing and mesh.
- Pour and cure the panel to the minimum concrete strength required for lifting.
- Strip the formwork and recess formers to expose the top of the anchor.
- Attach the correct lifting clutch by turning the clutch over the top of the anchor and locking it as described in the Parchem Safety and Installation Manual.
- Lifting gradually, remove the panel or element from the table or formwork, keeping the lift smooth and free from jerking.

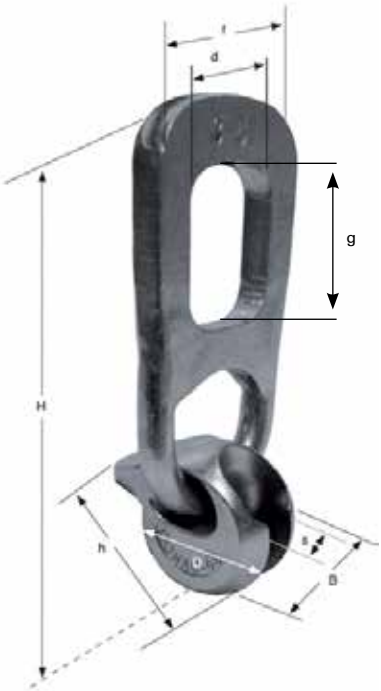

CLUTCHES

Dimensions & WLL

	LE13	LE25	LE5	LE10	LE20
H	200	230	275	404	560
f	75	87	117	160	190
g	68	82	86	121	150
d	44	52	66	95	110
B	33	40	57	73	112
h	72	1692	113	174	223
D	55	66	85	112	148
WLL T 0º sling angle	1.3	2.5	5	10	20
Annual proof load T	1.56	3	6	12	24
Annual proof load kN	15.3	29.4	58.8	117.7	235.4
Nominal WLL anchor	1.3	2.5	5	10	20

Inspection and Testing

Although Conlift Clutches are durable; they should be inspected before each lift to ensure that there are no signs of fatigue, distortion and/or damage. Once every six months, the slot width must be checked to ensure that it does not exceed the Max stated in the table below.
As stated in AS3850 each clutch must be proof load tested annually to 1.2 x Working Load Limit.

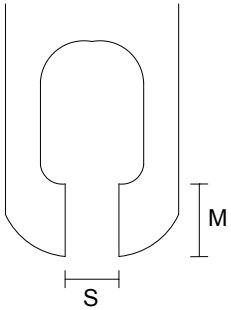

Size	S	S max	M min
1.3	11	13	5.5
2.5	15	18	5.5
3	22	25	8
10	31	32	12
20	43	46	18
32	55	58	24

Rigging inspection and Testing

As rigging can be become worn due to wear and tear, it should be inspected before every lift for damage. All rigging must be tagged and tested as per the Australian rigging standard.

CONLIFT CONE (FOOT) ANCHORS-DIMENSIONS, WORKING LOAD LIMITS

- Hot dipped galvanised to Australian Standard AS4680-1999
- Coating thickness -Not Spun and ≥6mm - 70 to 85 microns 600gm per square metre. Galvanizing meets the ASTM123 Standard.
- Forged from high impact strength construction steel 20Mn2 Alloy Structure Steel ø5.5 to 80mm.
- Tensile Strength 960MPa. Yield Strength 800 to 900MPa Precision to Grade B of the Standard GB/T3007 and JIS G4104.
- Genuine Conlift Foot Anchors are stamped with the Anchor strength WLL, the letter "C" and length of the individual anchor for ease of identification after installation.
- Conlift Anchors meet the requirements of AS3850-2003.

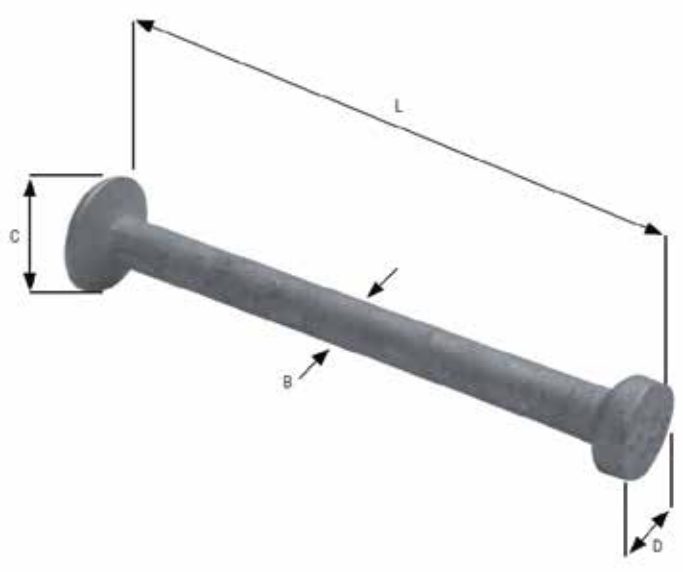

Standard Cone (Foot) Anchors

1.3 tonne WLL (max)	D	B	C	L	Pack Qty		Part Number		Accessories	
	19	10	25	Length		Galv	Black	S/Steel		
35mm Cone (Foot) Anchor				35	250	FA13035			Clutch	LE13
45mm Cone (Foot) Anchor				45	250	FA13045			Rubber Recess Former	RFR13
55mm Cone (Foot) Anchor				55	250	FA13055			Wingnut and Stud	WN13
65mm Cone (Foot) Anchor				65	250	FA13065			Plate	EAP13
85mm Cone (Foot) Anchor				85	200	FA13085			Steel Recess Former	RFS13
120mm Cone (Foot) Anchor				120	150	FA13120			Steel Recess Former Reduced	RFRR13
240mm Cone (Foot) Anchor				240	50	FA13240			Articulated Steel Recess Former	RFSA13
2.5 tonne WLL (max)	**D**	**B**	**C**	**L**	**Pack Qty**		**Part Number**		**Accessories**	
	25	14	35	Length		Galv	Black	S/Steel		
55mm Cone (Foot) Anchor				55	200	FA25055			Clutch	LE25
70mm Cone (Foot) Anchor				70	200	FA25070			Rubber Recess Former	RFR25
75mm Cone (Foot) Anchor				75	100	FA25075			Wingnut and Stud	WN25
85mm Cone (Foot) Anchor				85	100	FA25085			Plate	EAP25
90mm Cone (Foot) Anchor				90	100	FA25090			Steel Recess Former	RFS25
120mm Cone (Foot) Anchor				120	100	FA25120			Steel Recess Former Reduced	RFRR25
170mm Cone (Foot) Anchor				170	75	FA25170			Articulated Steel Recess Former	RFSA25
280mm Cone (Foot) Anchor				280	50	FA25280				
5 tonne WLL (max)	**D**	**B**	**C**	**L**	**Pack Qty**		**Part Number**		**Accessories**	
	36	20	50	Length		Galv	Black	S/Steel		
75mm Cone (Foot) Anchor				75	50	FA5075			Clutch	LE5
95mm Cone (Foot) Anchor				95	50	FA5085			Rubber Recess Former	RFR5
120mm Cone (Foot) Anchor				120	40	FA5120			Wingnut and Stud	WN5
170mm Cone (Foot) Anchor				170	30	FA5170			Plate	EAP5
240mm Cone (Foot) Anchor				240	25	FA5240			Steel Recess Former	RFS5
									Steel Recess Former Reduced	RFRR5
									Articulated Steel Recess Former	RFSA5
10 tonne WLL (max)	**D**	**B**	**C**	**L**	**Pack Qty**		**Part Number**		**Accessories**	
	47	28	70	Length		Galv	Black	S/Steel		
150mm Cone (Foot) Anchor				150	5	FA10150			Clutch	LE10
340mm Cone (Foot) Anchor				340	5	FA10340			Rubber Recess Former	RFR10
									Wingnut and Stud	WN10
									Plate	EAP10
20 tonne WLL (max)	**D**	**B**	**C**	**L**	**Pack Qty**		**Part Number**		**Accessories**	
	70	39	98	Length		Galv	Black	S/Steel		
150mm Cone (Foot) Anchor				340	5	FA20340			Clutch	LE20
340mm Cone (Foot) Anchor				500	5	FA20500			Rubber Recess Former	RFR20
									Wingnut and Stud	WN20
									Plate	EAP20
32 tonne WLL (max)	**D**	**B**	**C**	**L**	**Pack Qty**		**Part Number**		**Accessories**	
	88	50	135	Length		Galv	Black	S/Steel		
700mm Cone (Foot) Anchor				700	5	FA32700			Clutch	LE32
									Rubber Recess Former	RFR32
									Wingnut and Stud	WN32
									Plate	EAP32

Stainless Steel Foot Anchors are avaliable on request and subject to lead times.

CONLIFT REO (EYE) ANCHORS-DIMENSIONS, WORKING LOAD LIMITS

- Hot dipped galvanised to Australian Standard is AS4680-1999
- Coating thickness -Not Spun and ≥6mm - 70 to 85 microns 600gm per square metre. Galvanizing meets the ASTM123 Standard.
- Forged from high impact strength construction steel 20Mn2 Alloy Structure Steel ø5.5 to 80mm.
- Tensile Strength 960MPa. Yield Strength 800 to 900MPa Precision to Grade B of the Standard GB/T3007 and JIS G4104.
- Genuine Conlift Foot Anchors are stamped with the Anchor strength WLL, the letter "C" and length of the individual anchor for ease of identification after installation.
- A tension bar is threaded through the hole in the anchor and embedded deep into the concrete. See details below for the appropriate tension bar detail.

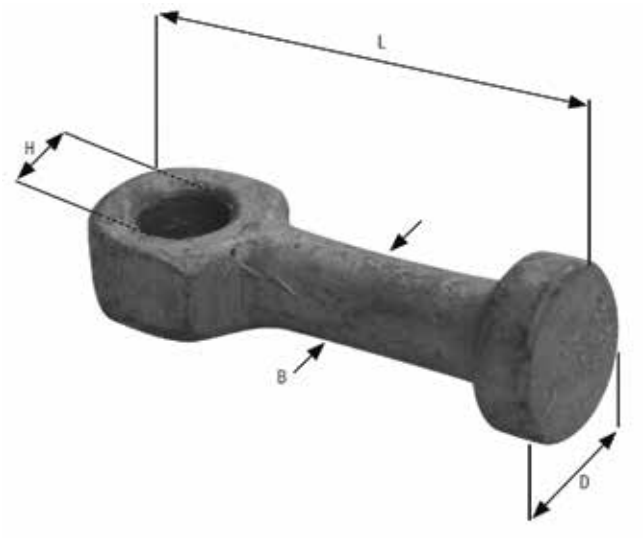

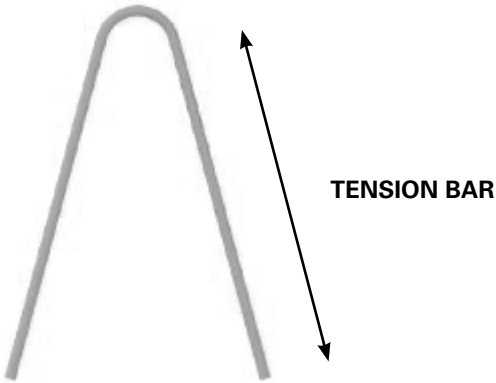

Standard Cone (Eye) Anchors

1.3 tonne WLL (max)	D	H	B	L	Pack Qty		Part Number		Tension Bar	Tension Bar	Accessories	
	19	10	10	Length		Galv	Black	Stainless	Length	Diameter	Clutch	LE13
50mm Reo (Eye) Anchor				50	250	EA1350			500	R8	Rubber Recess Former	RFR13
55mm Reo (Eye) Anchor				55	250	EA1355			500	R8	Wingnut and Stud	WN13
65mm Reo (Eye) Anchor				65	250	EA1365			500	R8	Plate	EAP13
											Steel Recess Former	RFS13
											Steel Recess Former Rubber Seal	RFRR13
											Articulated Steel Recess Former	RFSA13
2.5tonne WLL (max)	**D**	**H**	**B**	**L**	**Pack Qty**		**Part Number**		**Tension Bar**	**Tension Bar**	**Accessories**	
	26	14	14	Length		Galv	Black	Stainless	Length	Diameter	Clutch	LE25
90mm Reo (Eye) Anchor				90	100	EA2590			660	R12	Rubber Recess Former	RFR25
											Wingnut and Stud	WN25
											Plate	EAP25
											Steel Recess Former	RFS25
											Steel Recess Former Rubber Seal	RFRR25
											Articulated Steel Recess Former	RFSA25
5tonne WLL (max)	**D**	**H**	**B**	**L**	**Pack Qty**		**Part Number**		**Tension Bar**	**Tension Bar**	**Accessories**	
	36	18	20	Length		Galv	Black	Stainless	Length	Diameter	Clutch	LE5
90mm Reo (Eye) Anchor				90	50	EA590			800	N16	Rubber Recess Former	RFR5
120mm Reo (Eye) Anchor				120	25	EA5120			800	N16	Wingnut and Stud	WN5
											Plate	EAP5
											Steel Recess Former Rubber Seal	RFRR5
											Articulated Steel Recess Former	RFSA5
10 tonne WLL (max)	**D**	**H**	**B**	**L**	**Pack Qty**		**Part Number**		**Tension Bar**	**Tension Bar**	**Accessories**	
	47	25	28	Length		Galv	Black	Stainless	Length	Diameter	Clutch	LE10
180mm Reo (Eye) Anchor				180	10	EA10180			1000	N20	Rubber Recess Former	RFR10
											Wingnut and Stud	WN10
											Plate	EAP10
20 tonne WLL (max)	**D**	**H**	**B**	**L**	**Pack Qty**		**Part Number**		**Tension Bar**	**Tension Bar**	**Accessories**	
	70	37	39	Length		Galv	Black	Stainless	Length	Diameter	Clutch	LE20
250mm Reo (Eye) Anchor				250	5	EA20250			1680	N25	Rubber Recess Former	RFR20
											Wingnut and Stud	WN20
											Plate	EAP20
32tonne WLL (max)	**D**	**H**	**B**	**L**	**Pack Qty**		**Part Number**		**Tension Bar**	**Tension Bar**	**Accessories**	
	70	43	39	Length		Galv	Black	Stainless	Length	Diameter	Clutch	LE32
300mm Reo (Eye) Anchor				300	5	EA32300			2300	N28	Rubber Recess Former	RFR32
											Wingnut and Stud	WN32
											Plate	EAP32

Stainless Steel Eye Anchors are avaliable on request and subject to lead times.

RECESS FORMERS

- Recess formers are used to set anchors at the correct height & create a recess within concrete element.
- Recess formers are non-interchangeable with other load rated anchors.
- Available in a variety rubber, steel and articulated to suit a variety of applications.

Rubber Recess Formers

- Durable & chemically stable rubber for the attachment to all types moulds & formworks and puddling-in.

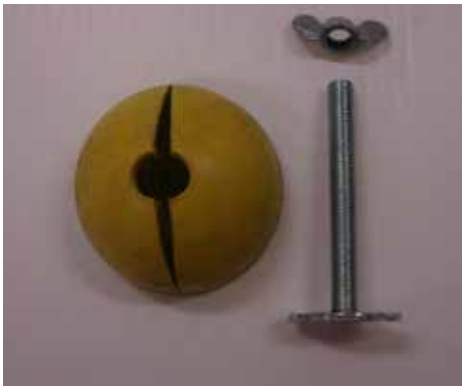

SIZE	1.3	2.5	5	10	20	32
Diameter	65	74	94	118	160	210
Code	RFR13	RFR25	RFR5	RFR10	RFR20	RFR32
Colour	Blue	Yellow	Blue	Yellow	Black	Black
Wingnut and stud	WN13	WN25	WN5	WN10	WN20	WN32
Plate	EAP13	EAP25	EAP5	EAP10	EAP20	EAP32

Steel Recess Former

For increased durability and life expectancy Conlift steel recess formers are available.
Sealed by a replaceable rubber retaining ring.
They are suitable for attachment to the mould.

SIZE	1.3	2.5	5
Diameter	60	74	94
Recess Code	RFS13	RFS25	RFS5
Ring code	RFRR13	RFRR25	RFRR5

Articulated Recess Former

Articulated recess formers are made from steel and are hinged to open and allow the anchor to be placed. To provide increased durability and life expectancy compared to using a rubber recess former.

SIZE	1.3	2.5	5
Diameter	60	74	90
Recess Code	RFSA13	RFSA25	RFSA5

STANDARD WORKING LOAD LIMIT IN TENSION FOR FOOT ANCHORS (WLL)

Size in Tonne	Anchor Length mm	Edge Distance mm	Distance between Anchors	Concrete Strength at Lift (Mpa) WLL (t)					
				10	15	20	25	32	40
1.3T	35	105	210	0.44	0.55	0.64	0.71	0.78	0.97
	45	135	270	0.62	0.77	0.90	1.00	1.10	1.3
	55	165	330	0.81	0.84	0.99	1.3	1.3	1.3
	65	195	390	1.01	1.06	1.23	1.3	1.3	1.3
	75	225	450	1.13	1.18	1.3	1.3	1.3	1.3
	85	255	510	1.3	1.3	1.3	1.3	1.3	1.3
	120	360	720	1.3	1.3	1.3	1.3	1.3	1.3
	240	720	1440	1.3	1.3	1.3	1.3	1.3	1.3
2.5T	55	165	330	0.81	0.84	0.98	1.06	1.27	1.40
	70	210	420	1.11	1.16	1.36	1.47	1.75	1.92
	75	225	450	1.28	1.34	1.56	1.69	2.02	2.21
	85	255	510	1.44	1.51	1.77	1.91	2.28	2.5
	90	270	540	1.89	1.98	2.13	2.20	2.39	2.5
	120	360	720	2.33	2.45	2.5	2.5	2.5	2.5
	170	510	1020	2.5	2.5	2.5	2.5	2.5	2.5
	280	840	1680	2.5	2.5	2.5	2.5	2.5	2.5
5T	75	225	450	1.31	1.76	2.15	2.30	2.67	3.01
	95	285	570	1.98	2.36	2.73	3.05	3.34	3.79
	120	360	720	3.55	4.12	4.45	5	5	5
	170	510	1020	4.20	4.77	5	5	5	5
	240	720	1440	5	5	5	5	5	5
10T	150	450	900	4.63	5.20	6.30	7.32	8.27	10
	340	1020	2040	10	10	10	10	10	10
20T	340	1020	2040	Not Ideal	Not Ideal	Not Ideal	20	20	20
	500	1500	3000				20	20	20
32T	700	2100	4200	Not Ideal	Not Ideal	Not Ideal	32	32	32

Working Load Limit (WLL) in tonnes (t) at a minimum 3 Factor of Safety on Ultimate Load

Panel Reinforcement: Minimum assumed is SL62 Mesh
Minimum Distance: 3 x anchor length from any edge
Minimum Distance between Anchors: 6 x anchor length
Performance must be re-evaluated with dimensions below these minimum values.
Short Anchors: Concrete must be 20MPa and performance should be re-evaluated.

STANDARD WORKING LOAD LIMIT IN SHEAR FOR FOOT ANCHORS (WLL)

Size in Tonne	Anchor Length mm	Edge Distance mm	Distance between Anchors	Concrete Strength at Lift (Mpa) WLL (t)					
				10	15	20	25	32	40
1.3T	35	105	210	0.26	0.27	0.32	0.35	0.42	0.46
	45	135	270	0.39	0.41	0.48	0.51	0.62	0.68
	55	165	330	0.45	0.47	0.55	0.6	0.72	0.79
	65	195	390	0.61	0.64	0.75	0.81	0.97	1.07
	75	225	450	0.76	0.79	0.93	1	1.14	1.25
	85	255	510	0.91	0.94	1.11	1.2	1.3	1.43
	120	360	720	1.3	1.3	1.3	1.3	1.3	1.43
	240	720	1440	1.3	1.3	1.3	1.3	1.3	1.43
2.5T	55	165	330	0.54	0.57	0.66	0.71	0.85	0.94
	70	210	420	0.73	0.76	0.89	0.96	1.16	1.28
	75	225	450	0.89	0.93	1.08	1.17	1.4	1.54
	85	255	510	1.04	1.09	1.28	1.38	1.65	1.82
	90	270	540	1.34	1.4	1.64	1.77	2.07	2.28
	120	360	720	1.63	1.71	2	2.16	2.5	2.75
	170	510	1020	2.5	2.5	2.5	2.5	2.5	2.75
	280	840	1680	2.5	2.5	2.5	2.5	2.5	2.75
5T	75	225	450	0.96	1.01	1.18	1.27	1.52	1.67
	95	285	570	1.38	1.45	1.7	1.83	2.19	2.41
	120	360	720	1.97	2.07	2.42	2.61	3.12	3.43
	170	510	1020	3.25	3.41	3.98	4.3	4.89	5.38
	240	720	1440	5	5	5	5	5	5.50
10T	150	450	900	3.06	3.21	3.74	4.04	4.84	5.32
	340	1020	2040	10	10	10	10	10	11.00
20T	340	1020	2040	Not Ideal	Not Ideal	Not Ideal	20	20	22.00
	500	1500	3000				20	20	22.00
32T	700	2100	4200	Not Ideal	Not Ideal	Not Ideal	32	32	35.20

Working Load Limit (WLL) in tonnes (t) at a minimum 3 Factor of Safety on Ultimate Load

Panel Reinforcement: Minimum assumed is SL62 Mesh .
Minimum Distance: 3 x anchor length from any edge.
Minimum Distance between Anchors: 6 x anchor length.
Performance must be re-evaluated with dimensions below these minimum values.
Short Anchors: Concrete must be 20MPa and performance should be re-evaluated.

STANDARD WORKING LOAD LIMIT IN TENSION FOR FOOT ANCHORS (WLL) WITH ONE REDUCED EDGE DISTANCE

Size in Tonne	Anchor Length mm	Edge Distance mm	Concrete Strength at Lift (Mpa) WLL (t)					
			10	15	20	25	32	40
1.3T	120	30	0.86	1.13	1.3	1.3	1.3	1.3
		35	1.03	1.3	1.3	1.3	1.3	1.3
		40	1.3	1.3	1.3	1.3	1.3	1.3
		50	1.3	1.3	1.3	1.3	1.3	1.3
2.5T	170	30	1.48	1.94	2.36	2.5	2.5	2.5
		40	1.67	2.18	2.5	2.5	2.5	2.5
		50	1.86	2.44	2.5	2.5	2.5	2.5
		60	2.07	2.5	2.5	2.5	2.5	2.5
		70	2.28	2.5	2.5	2.5	2.5	2.5
5T	240	50	3.13	4.1	4.93	5	5	5
		60	3.45	4.5	5	5	5	5
		70	3.83	4.95	5	5	5	5
		80	3.95	5	5	5	5	5
		90	4.41	5	5	5	5	5
10T	340	60	5.69	7.45	9.05	10	10	10
		70	6.1	8.05	9.75	10	10	10
		80	6.34	8.32	10	10	10	10
		100	7.32	9.6	10	10	10	10
		120	8.11	10	10	10	10	10
		140	8.93	10	10	10	10	10
20T	500	80	11.5	15.25	18.35	20	20	20
		100	12.88	16.9	20	20	20	20
		120	14.15	18.49	20	20	20	20
		140	15.75	20	20	20	20	20
		160	16.8	20	20	20	20	20
		200	18.7	20	20	20	20	20
		220	19.8	20	20	20	20	20
32T	700	100	21.15	27.77	32	32	32	32
		200	29.88	32	32	32	32	32
		250	32	32	32	32	32	32
		300	32	32	32	32	32	32
		400	32	32	32	32	32	32

Working Load Limit (WLL) in tonnes (t) at a minimum 3 Factor of Safety on Ultimate Load

Panel Reinforcement: Minimum assumed is SL62 Mesh

Preferred Anchor Placement.

Minimum Distance: 3 x anchor length from any edge.

Minimum Distance between Anchors: 6 x anchor length.

Performance must be re-evaluated with dimensions below these minimum values.

Short Anchors: Concrete must be 20MPa and performance should be re-evaluated.

Thin Panels: Additional reinforcing must be added and performance must be re-evaluated.

STANDARD WORKING LOAD LIMIT IN TENSION FOR FOOT ANCHORS IN THIN PRECAST ELEMENTS

Preferred Anchor Length
Two Reduced Edge Distances

Size in Tonne	Anchor Length mm	Element Thickness mm	Concrete Strength at Lift (Mpa) WLL (t)					
			10	15	20	25	32	40
1.3T	120	80	0.45	0.55	0.67	0.88	0.96	1.06
		100	0.53	0.68	0.83	1.09	1.20	1.30
		120	0.66	0.85	1.04	1.30	1.30	1.30
		150	0.82	1.07	1.30	1.30	1.30	1.30
2.5T	170	100	0.72	0.93	1.13	1.49	1.64	1.81
		150	1.07	1.40	1.70	2.23	2.45	2.50
		200	1.60	2.10	2.50	2.50	2.50	2.50
5T	240	150	1.51	1.98	2.41	3.16	3.47	3.83
		200	2.01	2.63	3.20	4.19	4.61	5.00
		250	2.51	3.29	4.00	5.00	5.00	5.00
10T	340	200	2.83	3.71	4.49	5.89	6.48	7.15
		250	3.52	4.62	5.60	7.35	8.08	8.91
		300	4.22	5.53	6.71	8.80	9.68	10.00
20T	500	250	5.18	6.80	8.25	10.82	11.90	13.12
		300	6.17	8.10	9.82	12.88	14.17	15.62
		400	8.20	10.76	13.05	17.13	18.84	20.00
32T	700	200	5.74	7.5	9.15	10.75	12.4	14.55
		400	11.45	15.1	18.25	21.7	25.2	29
		500	14.3	18.75	11.7	26.2	32	32

Working Load Limit (WLL) in tonnes (t) at a minimum 3 Factor of Safety on Ultimate Load

Panel Reinforcement: Minimum assumed is SL62 Mesh
Preferred Anchor Placement

Minimum Distance: 3 x anchor length from any edge
Minimum Distance between Anchors: 6 x anchor length
Performance must be re-evaluated with dimensions below these minimum values.

Short Anchors: Concrete must be 20MPa and performance should be re-evaluated.
Thin Precast Elements as Shown Above: Additional reinforcing must be added & performance should be re-evaluated.

STANDARD WORKING LOAD LIMIT IN TENSION FOR EYE ANCHORS (WLL)

Size in Tonne	Anchor Length mm	Edge Distance mm	Distance between Anchors	Concrete Strength at Lift (Mpa) WLL (t)					
				10	15	20	25	32	40
1.3T **Rebar** **Rebar**	50 65 **Straight** **Bent**	150 195 **W8 or R8** **W8 or R8**	300 390 **280mm** **250mm**	1.3 1.3 **Long** **Leg**	1.3 1.3	1.3 1.3	1.3 1.3	1.3 1.3	1.3 1.3
2.5T **Rebar** **Rebar**	90 **Straight** **Bent**	270 **W12 or R12** **W12 or R12**	540 **360mm** **330mm**	2.5 **Long** **Leg**	2.5	2.5	2.5	2.5	2.5
5T **Rebar** **Rebar**	90 **Straight** **Bent**	270 **N16** **N16**	540 **500mm** **400mm**	5 **Long** **Leg**	5	5	5	5	5
10T **Rebar** **Rebar**	180 **Straight** **Bent**	540 **N20** **N20**	1080 **600mm** **500mm**	10 **Long** **Leg**	10	10	10	10	10
20T **Rebar** **Rebar**	250 **Straight** **Bent**	750 **N25** **N25**	1500 **1015mm** **840mm**	20 **Long** **Leg**	20	20	20	20	20
32T **Rebar** **Rebar**	300 **Straight** **Bent**	900 **N28** **N28**	1800 **1525mm** **1150mm**	32 **Long** **Leg**	32	32	32	32	32

Working Load Limit (WLL) in tonnes (t) at a minimum 3 Factor of Safety on Ultimate Load

Panel Reinforcement: Minimum assumed is SL62 Mesh
Minimum Distance: 3 x anchor length from any edge
Minimum Distance between Anchors: 6 x anchor length
Performance must be re-evaluated with dimensions below these minimum values.
Short Anchors: Concrete must be 20MPa and performance should be re-evaluated.

STANDARD WORKING LOAD LIMIT IN SHEAR FOR EYE ANCHORS (WLL)

Size in Tonne	Anchor Length mm	Edge Distance mm	Distance between Anchors	Concrete Strength at Lift (Mpa) WLL (t)					
				10	15	20	25	32	40
1.3T **Rebar** **Rebar**	50 65 **Straight** **Bent**	150 195 **W8 or R8** **W8 or R8**	300 390 **280mm** **250mm**	0.38 0.45 **Long** **Leg**	0.41 0.48	0.48 0.56	0.5 0.6	0.56 0.72	0.6 0.79
2.5T **Rebar** **Rebar**	90 **Straight** **Bent**	270 **W12 or R12** **W12 or R12**	540 **360mm** **330mm**	1 **Long** **Leg**	1.04	1.22	1.32	1.57	1.72
5T **Rebar** **Rebar**	90 **Straight** **Bent**	270 **N16** **N16**	540 **500mm** **400mm**	1.09 **Long** **Leg**	1.15	1.34	1.45	1.73	1.89
10T **Rebar** **Rebar**	180 **Straight** **Bent**	540 **N20** **N20**	1080 **600mm** **500mm**	3.08 **Long** **Leg**	3.23	3.77	4.07	4.87	5.33
20T **Rebar** **Rebar**	250 **Straight** **Bent**	750 **N25** **N25**	1500 **1015mm** **840mm**	5.55 **Long** **Leg**	5.83	6.8	7.35	8.78	9.62
32T **Rebar** **Rebar**	300 **Straight** **Bent**	900 **N28** **N28**	1800 **1525mm** **1150mm**	8.01 **Long** **Leg**	8.4	9.8	10.6	12.67	13.88

Working Load Limit (WLL) in tonnes (t) at a minimum 3 Factor of Safety on Ultimate Load

Panel Reinforcement: Minimum assumed is SL62 Mesh
Minimum Distance: 3 x anchor length from any edge
Minimum Distance between Anchors: 6 x anchor length
Performance must be re-evaluated with dimensions below these minimum values.
Short Anchors: Concrete must be 20MPa and performance should be re-evaluated.

DESIGN CONSIDERATIONS FOR CONCRETE LIFTING SYSTEMS

The design engineer must take into account all limit states and failure mechanisms.
The following limit states are to be considered during the design process.
Guidance and recommendatiions can be found in AS3600 (Concrete structures) and AS1170 (Structural Design Actions)

- Anchor strength
- Concrete strength
- Combined anchor strength
  If a tension bar is to be installed with the anchor, their joint capacity must be considered.
- Design for concrete strength
- Serviceability
- Anchor robustness and flexibility
- Fatigue due to multiple lifting and corrosion
  Provided the Conlift anchor is showing no signs of corrosion or damage the are safe for multiple lifts.
- Atmospheric Corrosion
  All Conlift foot and eye anchors are galvanised (hot dipped) to ensure the are resistant to atmosphericcorrosion. Stainless steel anchors are available for more aggressive environments.
  The lifetime of Conlift galvanised anchor coatings depends upon the category as shown below.

Atmospheric Corrosivity Zones ISO 9223:2012 and ISO 14713-1:2009	Description	Typical Environment	Corrosion rate for the first year of exposure (µm/y)		Typical service life (years)				
					Galvanizing thickness (µm) and coating mass (g/m²)				
			Mild Steel	Zinc	14 µm 100 g/m²	20 µm 140 g/m²	42 µm 300 g/m²	85 µm 600 g/m²	125 µm 900 g/m²
C1	Very low	Dry indoors	≤1.3	≤0.1	100+	100+	100+	100+	100+
C2	Low	Arid/Urban inland	>1.3 to ≤25	>0.1 to ≤0.7	21-100+	36-100+	50-100+	100+	100+
C3	Medium	Coastal or industrial	>25 to ≤50	>0.7 to ≤2.1	7-21	12-36	17-50	40-100+	60-100+
C4	High	Calm sea-shore	>50 to ≤80	>2.1 to ≤4.2	4-7	6-12	8-17	20-40	30-60
C5	Very High	Surf sea-shore	>80 to ≤200	>4.2 to ≤8.4	2-4	3-6	4-8	10-20	15-30
CX	Extreme	Off-shore	>200 to ≤700	>8.4 to ≤25	1-2	1-3	1-4	3-10	5-15

Reproduced with permission of the Galvanisers Association of Australia : www.GAA.com.au

Note 1 This table is an extrapolation of well-established corrosion rates and is supported by case history evidence in Australia, where service life records of 50 years are common and up to 110 years are recorded. The corrosion rates are consistent with ISO 9223:2012 and ISO 14713-1:2009.

Note 2 Because the actual galvanizing thickness applied is usually well above the specification minimum, the service lives quoted in rain exposed locations are likely to be conservative. In addition, ISO 9224:2012 applies lower corrosion rates for both steel and zinc where the object is exposed to long term steady state environmental conditions.

Note 3 Sheltered and not rain-washed surfaces, in a marine atmospheric environment where chlorides are deposited, can experience a higher corrosivity category due to the presence of hygroscopic salts.

Note 4 The coastal zone is defined as between 100 metres to 1 km inland from sheltered seas and between 1 km and 10 – 50 km from surf beaches depending upon prevailing winds and topography.

Note 5 Measured corrosion rates for steel in selected locations in Australia are shown in AS 4312:2006.

Note 6 Galvanizing thicknesses of 14 µm (100 g/m²) and 20 µm (140 g/m²) are typically applied by an in-line process.

Note 7 A more complete description of each of the typical environments is available in ISO 9223:2012, ISO 14713-1:2009, AS 4312:2006, and from the GAA.

Further Guidance

Welding

As welding can cause zinc contamination and embrittlement from uncontrolled applied heat
Conlift anchors are not to be welded.

Panels Finish

Reinforce the concrete element to prevent unpermissable cracking that would require expensive patching and repair in the factory or on-site.
In certain applications, insignificant cracking and spalling may not be an issue. e.g. bridge beams, grease pits and sumps etc.
It is important to produce high quality precast concrete elements to enhance the overall aesthetics of a building.

ENGINEERING NOTES FOR DESIGNING CONCRETE LIFTING ANCHORS WITH AS3850:2003

To Calculate the Weight of the Element

WEIGHT = WIDTH X HIGH X THICKNESS X 2.4 with all measurements in metres
As specified in AS3850

To Calculate the Force of Adhesion

Select the Load Factor from the chart below as defined in AS3850 Clause 3.5.2

Design Lifting Condition	Load Factor	AS3850 Requirement
Lifting from smooth, oiled steel moulds and casting beds, handling and erection with a crane	1.2	1.2
Lifting from concrete casting beds, e.g: site-cast tilt up.	1.5	1.5
Lifting deep ribbed panels or objects where high suction and adhesion loads can be generated.	2	-
Lifting from moulds without removable side forms	3	-
Travelling over rough ground whilst suspended	4 ➔ 5	-

TOTAL LOAD = WEIGHT X LOAD FACTOR

To Select the Number of Lifting Positions

Establish the required number of anchors to ensure that the stresses from lifting do not exceed the strength of the concrete element being lifted.

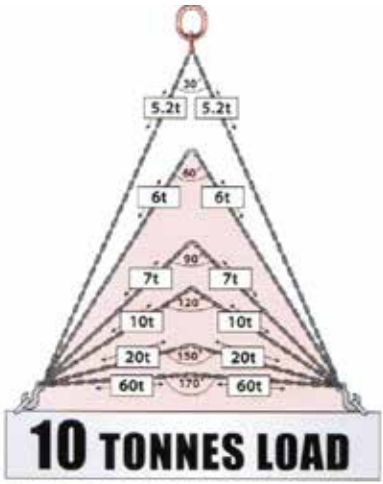

Never make sling length shorter than the distance between two anchors.

To Select the Rigging and Applicable Sling Factor

By using a correct width spreader bar a 90° angle is achieved giving a sling factor of 1.
By increasing the sling angle a greater load is applied to the anchor which will cause additional stresses on the concrete element. Therefore the Sling Angle should never exceed 120°.

Slinging factors follow as defined in AS3850:

SLING ANGLE	SLING ANGLE FACTOR
0^0	1
15^0	1.01
30^0	1.04
45^0	1.08
60^0	1.16
75^0	1.26
90^0	1.42
105^0	1.64
120^0	2

To Check The Load On Each Anchor

$$\text{LOAD ON EACH ANCHOR} = \frac{\text{PANEL OR ELEMENT WEIGHT X LOAD FACTOR X SLINGING FACTOR (if applicable)}}{\text{NUMBER OF ANCHORS}}$$

To Check The Load On The Clutch And Sling Components

$$\text{LOAD ON CLUTCH} = \frac{\text{PANEL OR ELEMENT WEIGHT X LOAD FACTOR X SLINGING FACTOR (if applicable)}}{\text{NUMBER OF ANCHORS}}$$

To Prevent Possible Failure From The Load Exceeding:

Anchor Capacity	Increase the number of lifting points Or Select a higher WLL anchor group.
Concrete Capacity	Select an eye anchor with a hanger bar Or Tie the anchor to extra reinforcing
Clutch Capacity	Increase the number of lifting points Or Select a higher WLL clutch and anchor group.

Concrete Breakout

Failure of anchors in concrete relies on 6 factors:

- Compressive strength of the surrounding concrete.
- Strength of the anchor.
- The anchors' embedment depth ***h***, this is defined by the anchor length and set-down.
- The anchors' distance from any edge or face ***a***. To fully develop the concrete breakout cone, ***a*** needs to be equal or greater than ***3h***.
- The distance between anchors ***c***. To fully develop the concrete breakout cone, ***c*** needs to be equal or greater than ***6h***.
- Direction of loading.
- Concrete breakout will occur at a proportionally reduced capacity when anchors are closer to edges or faces than ***3h*** or with a distance of less than ***6h*** between anchors.

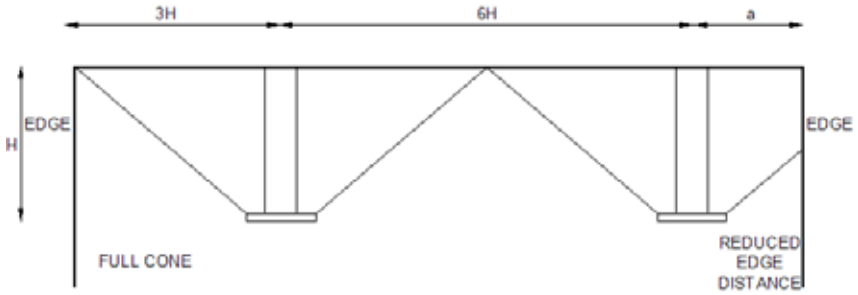

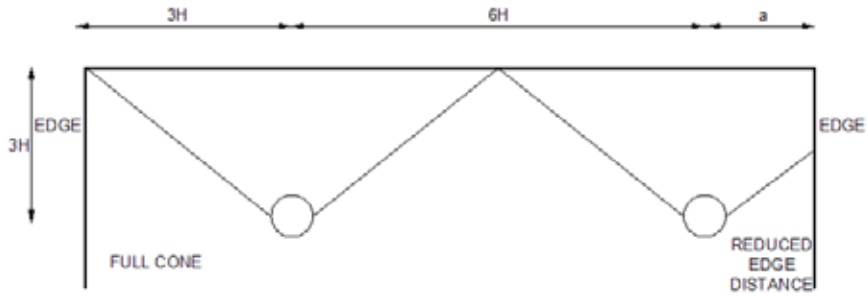

To Prediction of Concrete Cone Failure

The engineering principles of Haeussler or the ACI Concrete Capacity Design (CCD) models should be used to predict concrete cone failure.

Calculation of Reduction Factors for Edge Distances

Reduction Factor in Tension

Reduction Factor	Ψ_2
Suggested Edge Distance	E = 3h
Given Edge Distance	a
Anchor Embedment	h
Thickness of the element	D

$$\Psi_2 = [0.7 + 0.3\,(a/E)] \times [(a + E) / 2E\,]$$

Reduction Factor in Shear

Thickness of the Element will also affect the shear capacity of the anchor

Reduction Factor	$\Psi\sigma$
Suggested Edge Distance	E = 3h
Given Edge Distance	a
Anchor Embedment	h
Thickness of the element	D

a < E and D > 1.5a

Reduced edge distance and anchor length is greater than 1.5 edge distance

$$\Psi\sigma = [0.7 + 0.3\,(a/E)] \times [(a^2 / E^2\,]$$

a < E and D < 1.5a

Reduced edge distance and anchor length is less than 1.5 edge distance

$$\Psi\sigma = [0.7 + 0.3\,(a/E)] \times [(a \times D / 1.5 \times E^2\,]$$

a > E but D < E

Edge distance is as suggested and anchor length is less than the suggested edge distance

$$\Psi\sigma = [(a \times D / 1.5 \times E^2\,]$$

Limiting Factor when Tension and Shear Loads are Applied at the Same Time

Be aware if both tension and shear loads occur at the same time check the combined load interaction.

$$T/T_a + V/V_a \leq 1.2$$

T	Applied load in Tension
T_a	Allowable load in Tension
V	Applied load in Shear
V_a	Allowable load in Shear

ONE EDGE REDUCED DISTANCE

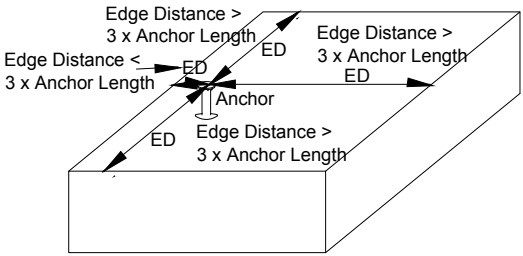

TWO EDGE REDUCED DISTANCE (THIN PANELS)

THIN PANELS

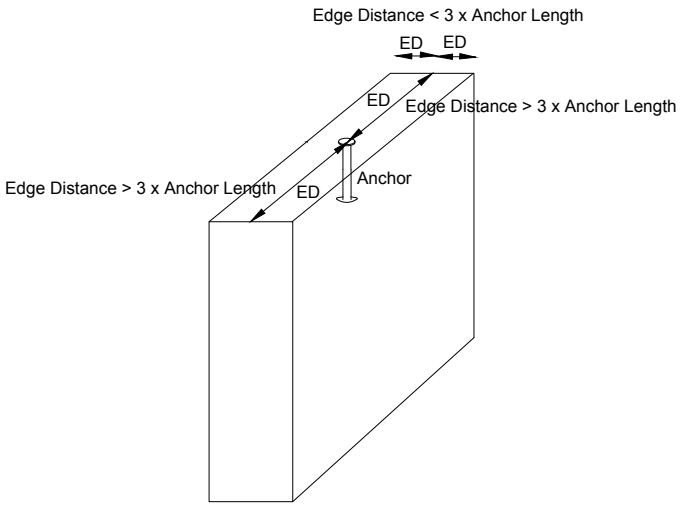

National Head Office

7 Lucca Road,

Wyong, NSW 2259

T: (02) 4350 5000

www.parchem.com.au

Conlift Concrete Lifting Systems

Civil Design Manual